Wiegand

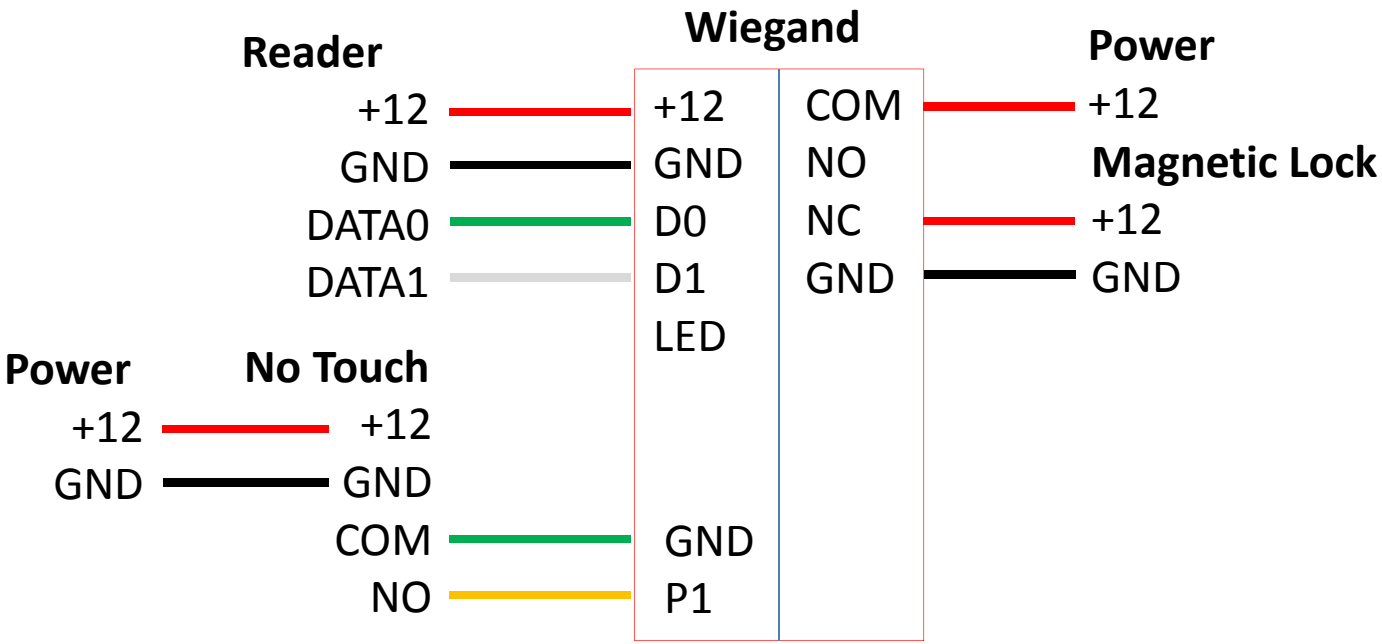
Reader
+12
GND
DATA0
DATA1
Wiegand
+12
GND
D0
D1
LED
GND
P1
COM
NO
NC
GND
Power
+12
Magnetic Lock
+12
GND
Power
+12
GND
No Touch
+12
GND
COM
NO

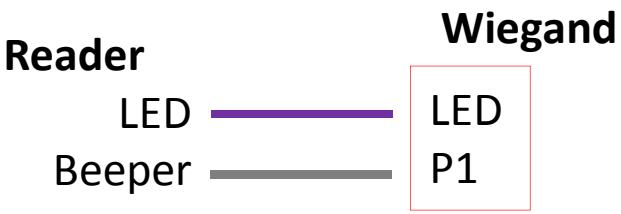
Reader
LED
Beeper
Wiegand
LED
P1